General Tolerances								—	▱	⊥
variable range	to 6	over 6 to 10	over 10 to 30	over 30 to 60	over 60 to 100	over 100 to 160	over 160 to	to 10	over 10 to 100	over 100 to
tolerance	±0.20	±0.30	±0.50	±0.70	±1.00	±1.30	±1.60	0.10	0.30	0.60

REV	ECN	DESCRIPTION	DRFT	DATE

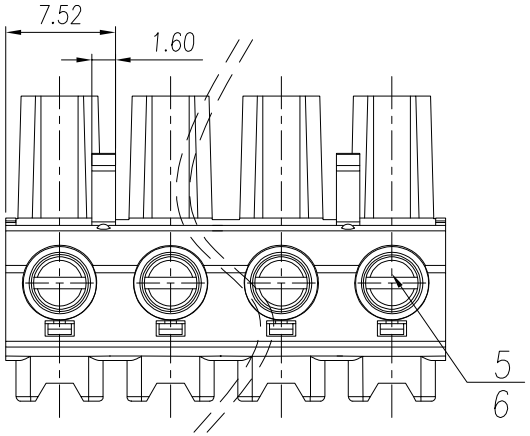

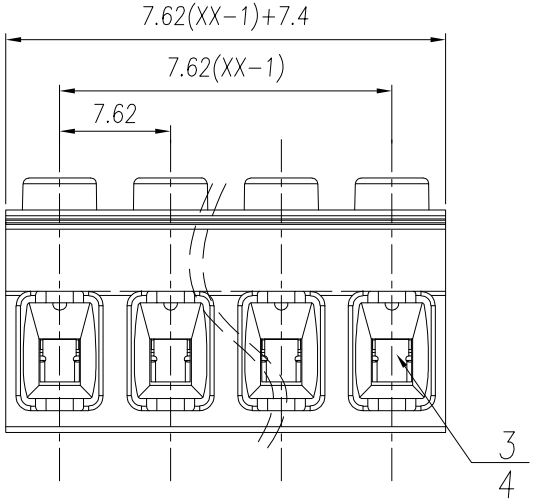

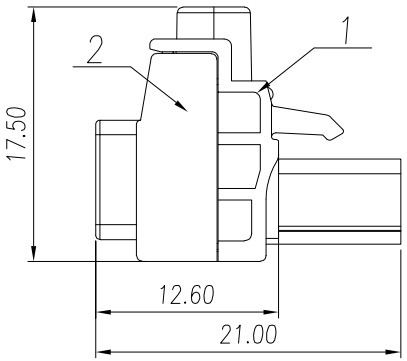

Spring	Stainless Steel	/
Conductor	Copper alloy	Sn Plated
Button	PA66	UL94V−0
Insulator	PA66	UL94V−0
NAME OF PART	MATERIAL	NOTES

UL 标准/UL Standard:	B	C	D
额定电压/电流/Rated Voltage(V)/Current(A)	600/20	600/20	/
IEC 标准/IEC Standard:			
过压类别/Overvoltage Category/污染等级/Pollution Degree	Ⅲ/2		
额定电压/电流/Rated Voltage(V)/Current(A)	1000/16		
额定脉冲电压(KV)/Rate Impulse Voltage(KV)	8.0		
螺丝扭矩/Torque Tightening(N·m/Lb.in)	/		
线径范围(硬线和软线)/Wire Range(rigid and flexible)(mm²/AWG)	/		
间距/Pitch(mm)/线数范围/Poles	7.62/XX=02~12P		
剥线长度/Stripping length(mm)	/		
使用温度范围/Operating temperature(°C)	−40~+105		
符合RoHS环保要求/Conform to RoHS	Yes		

DB2EKHV— 7.62 — XXP — C

(Series No.) (Pitch) (Poles)

(Color) : GN:(Green) , BK:(Black) , BU:(Blue) , RD:(Red) , GY:(Gray)
OG:(Orange) , WT:(White) , YL:(Yellow) , CR:(Clear)

MAT NO.:	/
STATUS:	/
APPD:	MARK 2024.10.26
CHKD:	MARK 2024.10.26
DRFT:	MARK 2024.10.26

DORABO 宁波地博电气有限公司 NINGBO DORABO ELECTRICAL CO., LTD

NAME: DB2EKHV−7.62−XXP−C

DRAWING NO.: / REV: M0

SIZE: A4 mm (inch) TYPE: CUSTOMER_DRAWING SCALE: SHEET: 1/1