linear dimension(Tolerances Standard GB/T 14486-2008)								—	⌭	⊥
variable range	to 6	over 6 to 10	over 10 to 30	over 30 to 60	over 60 to 100	over 100 to 160	over 160 to	to 10	over 10 to 100	over 100 to
tolerance	±0.20	±0.30	±0.50	±0.70	±1.00	±1.30	±1.60	0.10	0.30	0.60

REV	ECN	DESCRIPTION	DRFT	DATE

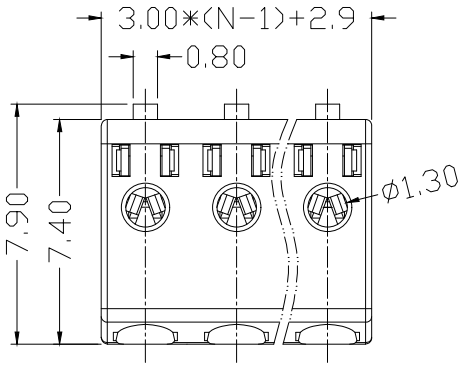

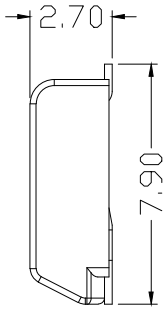

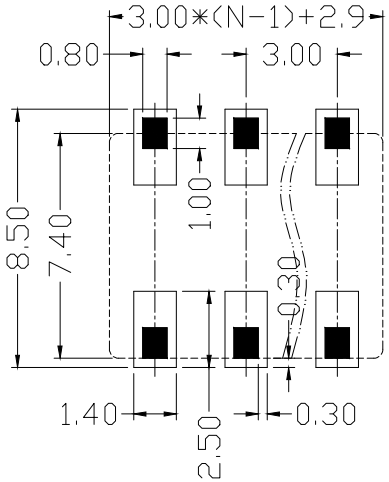

PCB LAYOUT

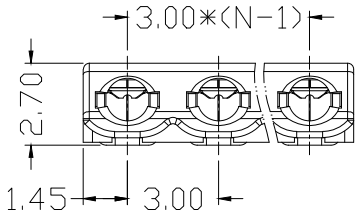

UL/CUL 技术 参数 UL/CUL Technical Data			
等 级 Use Group	B	C	D
额定电压 Rated Voltage [V]	250	-	-
额定电流 Rated Current [A]	3	-	-
接线范围 Wire Range 单/多芯线 Solid/Stranded [AWG]	22-26		
耐电压 Withstanding Voltage	2000V/1Min		
IEC 技术参数 IEC Technical Data			
过电压类别 Overvoltage Category	III	III	II
污染等级 Contamination Class	3	2	2
额定电压 Rated Voltage [V]	63	160	320
额定电流 Rated Current [A]	3		
导线截面积 Conductor cross section 硬质/柔性导线 Solid/ flexible [mm²]	0.3		
一般参数 Other Data			
间距 Pitch [mm]	3.0		
极数 Poles [P]	01~03		
剥线长度 Stripping Length [mm]	-		
螺丝 Screw/扭矩 Torque(Max) [N.m]	-		
工作温度 Operating temperatur [°C]	-40~+105		

DB2052 — 3.0 — XXP — C

(Series No.) (Pitch) (Poles)

(Color):GN:(Green), BK:(Black), BU:(Blue), RD:(Red), GY:(Gray) OG:(Orange), WT:(White), YL:(Yellow), CR:(Clear)

Conductor	Copper alloy	Sn Plated
Insulator	PA66	UL94V-0
NAME OF PART	MATERIAL	NOTES

DORABO 宁波地博电气有限公司 NINGBO DORABO ELECTRICAL CO., LTD

APPD: JTing Chen	2023.03.01	NAME: DB2052-3.0-XXP-C
CHKD: Duck Mao	2023.03.01	
DRFT: Steven Lu	2023.03.01	DRAWING NO.: / REV M0
SIZE: A4	mm (inch)	TYPE: CUSTOMER_DRAWING SCALE: SHEET 1/1